GLOBAL PST CONSORTIUM

Power System Oscillation Source Analysis Using OSLp Tool

November 16, 2022

Zoom Housekeeping

- This webinar is being recorded and will be shared with attendees.
- Attendees are automatically muted upon joining and throughout the webinar.
- Please use the Chat feature to add comments and share input.
- Please use the Q&A function to ask questions and ensure your question is answered. You can find this function in your toolbar.
- If you have technical issues, please use the chat feature to message Holly Darrow or Isabel McCan.
- You can adjust your audio through the audio settings. If you are having issues, you can also dial in and listen by phone. Dial-in information can be found in your registration email.
- There is a short survey that will launch at the end of the webinar. Your survey responses help us tailor training content, improve your webinar experience, and gain support to host future events.

Today's Speakers

Mohit Joshi
Energy Systems Modeler and Analyst
National Renewable Energy Laboratory

Bin Wang
Asst. Professor, Dept. of Electrical & Computer Engineering
University of Texas at San Antonio

Shri. Abishek RS
Deputy Manager (SRLDC)
POSOCO

MVD Raghava
Assistant Manager
POSOCO

GLOBAL PST CONSORTIUM

nationalgridESO

NREL Transforming ENERGY

IEEE Advancing Technology for Humanity

VTT

AEMO AUSTRALIAN ENERGY MARKET OPERATOR

CSIRO

EPRI ELECTRIC POWER RESEARCH INSTITUTE

Imperial College London

EIRGRID GROUP

DTU

Fraunhofer CINES

olade Organización Latinoamericana de Energía

ercot

California ISO

CSIR Touching lives through innovation

ENERGINET

ASEAN CENTRE FOR ENERGY ACE

ESIG ENERGY SYSTEMS INTEGRATION GROUP

Global Power System Transformation (G-PST) Consortium

What?

A global **consortium** focused on support to **power system operators with advanced, low-emission solutions**

Who?

Founding System Operators

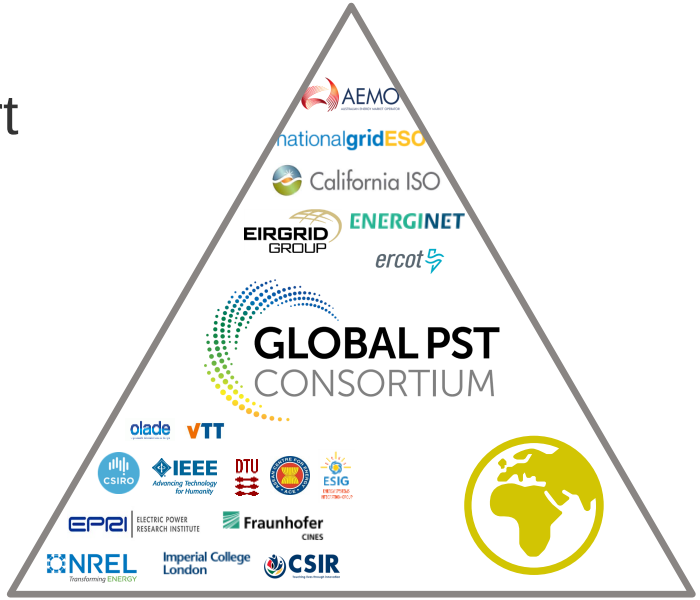

G-PST Core Team Technical Institutes

Emerging Economy System Operators

Indonesia, Ukraine, Vietnam, India, South Africa, Tanzania, Morocco, Peru, Colombia, and others

How?

5 Pillars

1. **System Operator Research and Peer Learning**
2. **System Operator Technical Assistance**
3. **Workforce Development**
4. **Localized Technology Adoption Support**
5. **Open Tools and Data**

Partner Country System Operator *Modes* of Support

Peer learning with other system operators

Direct technical assistance and training

Internship and fellowship programs

Embedded expert assistance

Learning on research innovations

Conducting joint applied research

Dissipating Energy Flow (DEF) for Locating the Source of Oscillation

Bin Wang, PhD, PE
University of Texas at San Antonio

Nov. 16, 2022

Power System Oscillations

- A marginal state between stable and unstable
- 0.1-3Hz oscillations for traditional power grids
- 0.2Hz-8Hz-20Hz-100x Hz oscillations for low-inertia grids

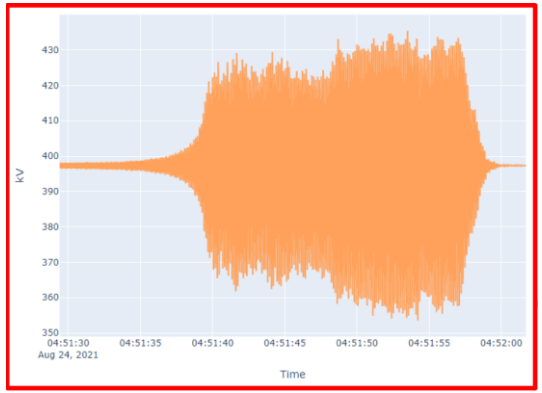

Wide-spread 8Hz voltage oscillations in Scotland in Aug. 2021
Source: [1] J. Leslie, Managing Grid Stability in a High IBR Network, G-PST/ESIG Webinar Series, Jan. 25, 2022

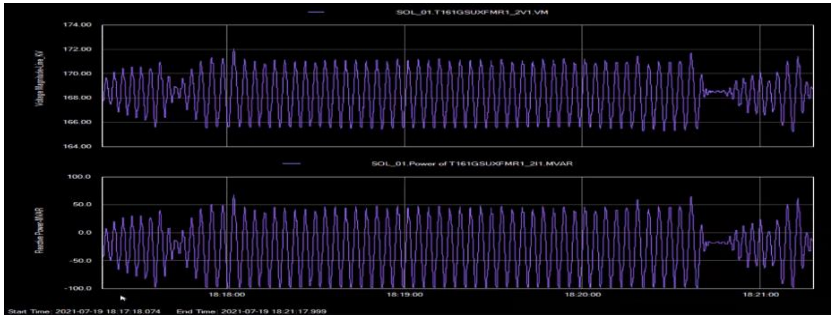

0.29Hz oscillations involving PV
IRPWG Meeting on Aug. 19, 2021
Source: TVA

Existing Research on Oscillation Analysis

- Detection
- Estimation of oscillation parameters
  - Amplitude
  - Frequency
  - Damping ratio
  - Mode shape

$$y(t) = \sum_{i=1}^{n} A_i e^{\sigma_i t} \cos(\omega_i t + \theta_i)$$

- Classification: forced vs. natural mode
- Source location: identifying the destabilizing component(s)

Oscillation Source Location (OSL) Methods

- Some existing methods by 2015 [2]
- New developments through 2022 [3]
  - Model inference-based methods
  - Purely data-driven methods
  - Other methods

Category	Key Idea	Cons
Damping torque	The generator with a negative damping torque coefficient is the source	Possible unavailability of rotor angle and speed data. Possible failures under forced oscillation cases.
Mode shape	Largest magnitude, most leading phase of the mode shape or their combinations may indicate the source	Lack of a theoretical foundation. Possible failures for cases having weakly damped/undamped oscillation together with forced oscillation.
Energy	The device producing dissipation energy is the source	Strong assumption in modeling loads and network. Lack of theoretical proofs for multi-mode cases.
Equivalent circuit	The source of the equivalent circuit is the source of the oscillation	Possible failures when the phasor concept cannot be applied, e.g. non-sinusoidal oscillations. Lack of theoretical proofs for multi-mode oscillation cases.
Hybrid	A larger difference between simulations and measurements indicates the source	Possible unavailability of the accurate model of the entire system.
Traveling wave	The closer to the source, the earlier the location will exhibit oscillation	Inaccurate and unreliable detection of the oscillation arrival time. Unavailability of the wave speed map in real-time. Lack of investigations on multi-mode cases.
Machine learning	An offline trained decision tree from model-based simulations to locate the source using online measurements	Possible unavailability of the accurate model of the entire system. Can be only applied to forced oscillation cases.

[2] **B. Wang**, K. Sun, “Location Methods of Oscillation Sources in Power Systems: A Survey,” MPCE, 2017
[3] **B. Wang**, S. Maslennikov, “Synchronphasor Data for Oscillation Source Location,” Synchrophasor Technology: For Real-Time Operation of Power Networks, IET, UK, to appear.

Dissipating Energy Flow (DEF) Method

- Energy method [4] → DEF [5]
- Inputs required for calculation
  - PQVθ measured by PMU
- Physical meaning

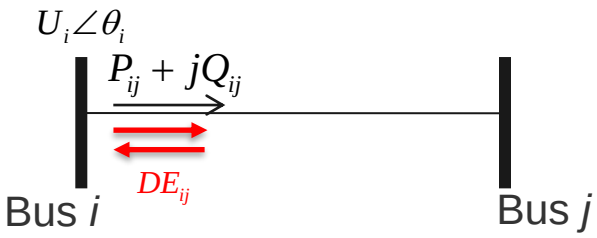

DE_{ij}	Implication
$DE_{ij} = 0$	System is under steady state
$DE_{ij} \neq 0$	System is experiencing transients/oscillations
$DE_{ij} > 0$	Oscillation source is behind bus i
$DE_{ij} < 0$	Oscillation source is behind bus j

$$W_{ij}(t) = \int \left(\Delta P_{ij} d\Delta\theta_i + \Delta Q_{ij} \frac{d(\Delta V_i)}{V_i^*} \right)$$
$$= \int \left(\Delta P_{ij} \cdot 2\pi f_i dt + \Delta Q_{ij} \frac{d(\Delta V_i)}{V_i^*} \right)$$
$$= DE_{ij} \cdot t + b_{ij}$$

[4] L. Chen, Y. Min, W. Hu, “An energy-based method for location of power system oscillation source,” TPWRS, 2013
[5] S. Maslennikov, **B. Wang**, E. Litvinov, “Dissipating energy flow method for locating the source of sustained oscillations,” IJEPES, 2017

Illustration of DEF for OSL

- DEF analysis of two real events [5]

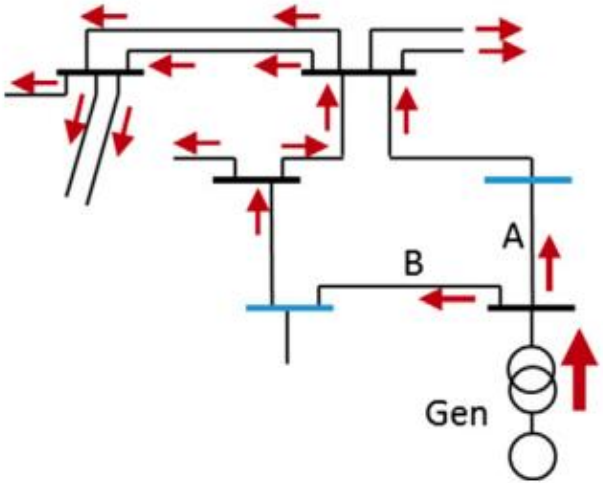

Fig. 3. Oscillation source location for April 5, 2013 event.

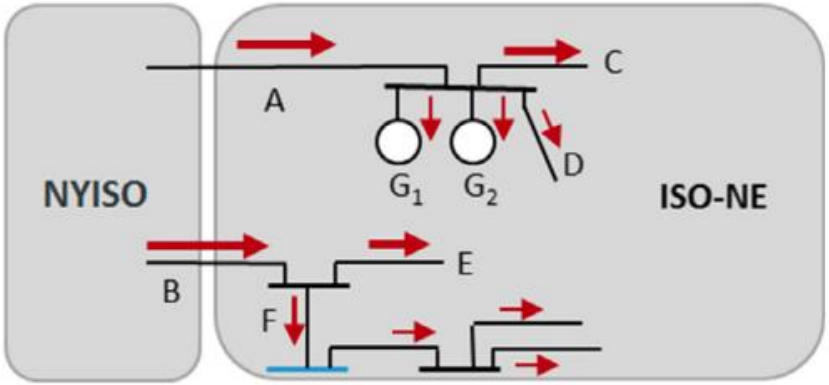

Fig. 4. Locating the source of oscillations for June 17, 2016 event.

[5] S. Maslennikov, **B. Wang**, E. Litvinov, “Dissipating energy flow method for locating the source of sustained oscillations,” IJEPES, 2017

DEF's Effectiveness

- Oscillation management at ISO-NE [6]

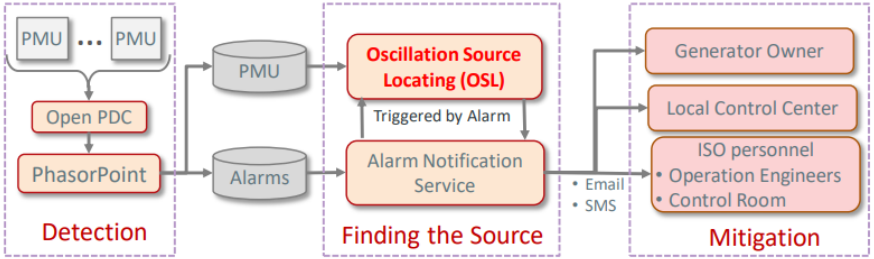

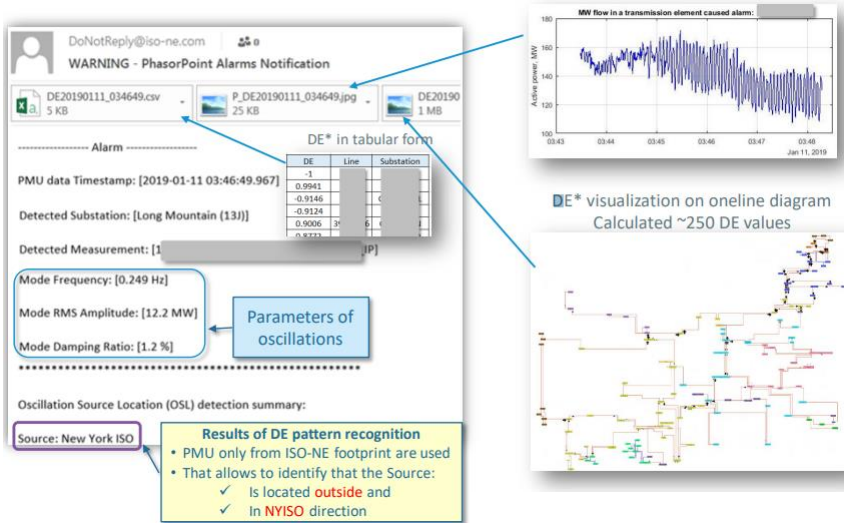

  - Since 2017, online OSL has automatically processed 1200+ oscillation events. Alerts and Alarms automatically generated by the PhasorPoint application by GE.
  - Correctly identified the source (generator and area) for all instances of oscillations with known sources inside and outside of ISO-NE.

[6] S. Maslennikov and E. Litvinov, "ISO New England Experience in Locating the Source of Oscillations Online," TPWRS, 2021

2021 IEEE-NASPI OSL Contest

- Co-hosted by IEEE and NASPI [7-8]
- Objective: evaluating the efficiency of OSL methods and their practical implementation.
- Contest highlights:
  - 13 challenging simulated events [9]
  - 60 teams from 11 countries signed up
  - 21 submissions

IEEE-NASPI Oscillation Source Location Contest

In recent years, large-amplitude sustained oscillations have been observed in power grids around the world, thanks to widely deployed PMUs. Many of the observed oscillations did not appear in traditional model-based studies. Such oscillations are either due to unmodeled dynamics or unexpected periodic inputs. Since these oscillations are not represented in the simulation models, they are not visible in the planning studies and no mitigation measures can be designed offline. Therefore, finding the originating source(s) is crucial in real-time operations. Finding the source(s) not only enable timely mitigation measures and ensure secure grid operations, but also help generator owners manage asset health and investigate asset failures at an early stage.

The 2021 IEEE-NASPI co-hosted Oscillation Source Location (OSL) Contest aims to help the academia and vendors further develop & improve the currently available OSL tools, and help utilities identify & evaluate OSL tools for real-time use. The contest is open to the public; any individual, team or entity (except the committee members or their affiliations) can participate.

Committee

- Ning Zhou (Binghampton University)
- Jim Follum (Pacific Northwest National Laboratory)
- Athula Rajapakse (University of Manitoba)
- Bin Wang (National Renewable Energy Laboratory)
- Slava Maslennikov (ISO New England)
- Mani Venkatasubramanian (Washington State University)
- Evangelos Farantatos (Electric Power Research Institute)
- Jeff Bloemink (Powertech Labs)

[7] https://www.naspi.org/node/890
[8] http://web.eecs.utk.edu/~kaisun/Oscillation/2021Contest/
[9] S. Maslennikov, **B. Wang**, “Creation of Simulated Test Cases for the Oscillation Source Location Contest,” IEEE PESGM, 2022

Summary of 2021 IEEE-NASPI OSL Contest [10]

Energy-based methods are most efficient

DEF

Team		1/2	1/2	3	4	5	6	7	8	9	10	11	12	13	14	15	16	17	18	19	20	21
Score		110	110	99	82	77	76	71	68	62	57	55	44	47	46	45	42	38	37	25	18	17
Used Method	1		X	X	X	X	X	X	X	X		X									X	
	2										X	X					X			X		
	3		X	X	X								X	X	X	X		X	X			X
	4	X																				

Details of implementation could be critical

Machine Learning and Model-based method are less efficient

Methods
1: Energy-based
2: Oscillation shape and magnitude
3: Machine Learning and Model-based analytic
4: Cross Power Spectra Density

[10] J. Follum, S. Malennikov, E. Farantatos, "IEEE/NASPI Oscillation Source Location Contest," NASPI Meeting, Oct. 7, 2021

How to Get DEF Tool?

- OSLp software V1.3 by ISO-NE, free of charge at [11] upon request.
- DSATools/DSAOA since Release 20.0 [12].

Table 1.1 Summary of Two Implementations of DEF Method by ISO New England

DEF Implementation	Notes
OSLp V1.3	This is the latest version of OSLp by ISO New England as of September 2022 that can be shared upon request at [91]. Several pre- and post-processing techniques are integrated for better performance when dealing with real PMU data, including automatic data window selection, band pass filtering, spectral analysis, and spikes analysis.
OSLp V2.0	This is a beta version of OSLp that is being developed internally within ISO-NE and will be sharable later. This version contains all features in V1.3, and has the following new features: (1) implementation of the Complex DEF [45], (2) implementation of a Cross Power Spectral Density (CPSD) approach [88], (3) classification of oscillation source in terms of active power-frequency control or reactive power-voltage control, (4) enhanced capability for noise filtering, and (5) enhanced data processing to handle PMU data from low-voltage distribution systems potentially containing high-frequency oscillations involving inverter-based resources.

Source:
B. Wang, S. Maslennikov, "Synchronphasor Data for Oscillation Source Location," Synchrophasor Technology: For Real-Time Operation of Power Networks, IET, UK, to appear.

[11] https://www.iso-ne.com/participate/support/request-software
[12] https://www.dsatools.com/

Final Remarks

- DEF is a measurement-based tool for locating the source of oscillation, i.e., the component(s) destabilizing the system.
- DEF is not perfect in theory. It may fail in case of complex control interactions [13].
- DEF is among the most effective tools so far.

[13] Y. Zhi and V. Venkatasubramanian, "Analysis of Energy Flow Method for Oscillation Source Location," TPWRS, 2021

For Further Information

[1] J. Leslie, Managing Grid Stability in a High IBR Network, G-PST/ESIG Webinar Series, Jan. 25, 2022.
https://www.esig.energy/event/webinar-managing-grid-stability-in-a-high-ibr-network/

[2] Bin Wang, Kai Sun, “Location Methods of Oscillation Sources in Power Systems: A Survey,” Journal of Modern Power Systems and Clean Energy, 2017, https://ieeexplore.ieee.org/document/8946821

[3] Bin Wang, Slava Maslennikov, “Synchronphasor Data for Oscillation Source Location,” Synchrophasor Technology: For Real-Time Operation of Power Networks, IET, UK, to appear.

[4] L Chen, Y Min, W Hu, “An energy-based method for location of power system oscillation source,” IEEE Transaction on Power Systems, 28(2):828-836, 2013
https://ieeexplore.ieee.org/document/6296740

[5] S Maslennikov, B Wang, E Litvinov, “Dissipating energy flow method for locating the source of sustained oscillations,” International Journal of Electrical Power and Energy Systems, 2017.
https://www.sciencedirect.com/science/article/pii/S0142061516323365

[6] S. Maslennikov and E. Litvinov, "ISO New England Experience in Locating the Source of Oscillations Online," in *IEEE Transactions on Power Systems*, vol. 36, no. 1, pp. 495-503, Jan. 2021.
https://ieeexplore.ieee.org/document/9132669

[7] IEEE-NASPI Oscillation Source Location Contest, https://www.naspi.org/node/890

[8] 2021 IEEE-NASPI Oscillation Source Location Contest, http://web.eecs.utk.edu/~kaisun/Oscillation/2021Contest/

[9] S. Maslennikov, B. Wang, “Creation of Simulated Test Cases for the Oscillation Source Location Contest,” IEEE PES General Meeting, 2022, https://www.nrel.gov/docs/fy22osti/81394.pdf

[10] J. Follum, S. Malennikov, E. Farantatos, “IEEE/NASPI Oscillation Source Location Contest,” NASPI Meeting, Oct. 7, 2021, https://www.naspi.org/sites/default/files/2021-10/D3S8_01_follum_pnnl_20211007.pdf

[11] ISO New England – Request Software, https://www.iso-ne.com/participate/support/request-software

[12] DSATools, https://www.dsatools.com/

[13] Y. Zhi and V. Venkatasubramanian, "Analysis of Energy Flow Method for Oscillation Source Location," in *IEEE Transactions on Power Systems*, vol. 36, no. 2, pp. 1338-1349, March 2021.
https://ieeexplore.ieee.org/document/9200532

Thank you!

Bin Wang, PhD, PE
IEEE Senior Member
Assistant Professor
bin.wang2@utsa.edu
University of Texas at San Antonio

GLOBAL PST CONSORTIUM

Power System Oscillation Source Analysis Using OSLp Tool

November 16, 2022

Power System Operation Corporaton (POSOCO)

Outline

- Introduction & overview of Southern Regional (SR) grid
- OSLp journey so far
- Overview of the Dissipating Energy Flow (DEF) method
- Case Studies
- Implementation of OSLp
- Demo of the web dashboard

SR Grid Overview

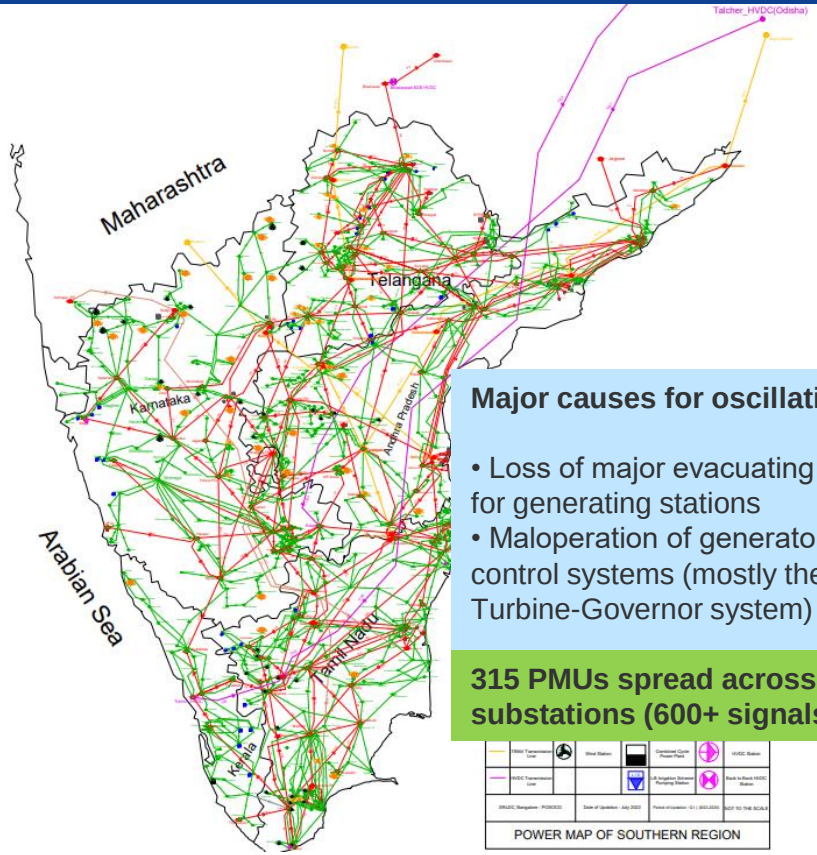

Southern Regional Grid Highlights

- Peak Demand : 60876 MW
- Daily energy consumption: 1252 Mu
- Daily Solar generation: 95 MUs
- Installed Capacity : 119 GW

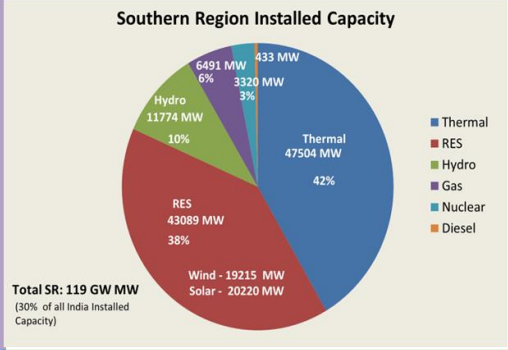

Major causes for oscillations

- Loss of major evacuating lines for generating stations
- Maloperation of generator control systems (mostly the Turbine-Governor system)

315 PMUs spread across 95 substations (600+ signals)

Transmission Lines

446 No. / 45412 Ckm

22 No. / 8315 Ckm

Transformation Capacity

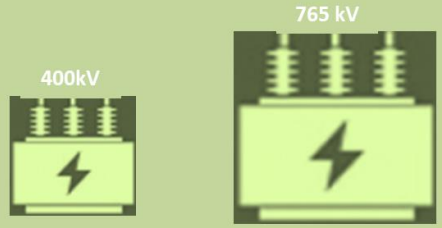

326 No. / 113812 MVA

20 No. / 30000 MVA

OSLp journey so far

- NREL & ISO New England provided OSLp source code in Matlab
- Converted to Python and validated using offline PMU data
- Parallel processing techniques to improve speed
- Deployed in Real Time
- Trigged by an already existing PMU Event Detection Engine (Zscore based)
- Real Time results viewed by the operator in a web dashboard
- Matrix Pencil method to supplement DEF method

Overview of the Dissipating Energy Flow (DEF) method

- Data cleaning (removing outliers and stalled signals)
- Identification of the dominant mode using FFT
- Filtering the Real Power (MW) signal for the dominant mode
- Identify the line with maximum amplitude of filtered mode (study line)
- Identify the time window wherein the oscillation is predominant (study window)
- Compute the dissipating energy flow for each branch
- Visualize the dissipating energy directions in a map to identify thesource of oscillation

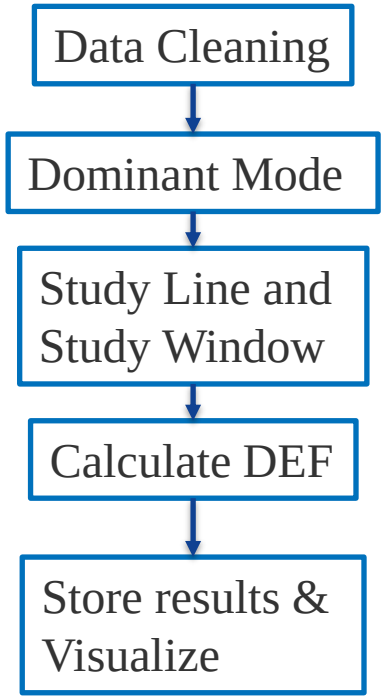

Case Studies

Case Study 1

April 27, 2022 few lines tripped in Sharavathi hydro complex triggering oscillations

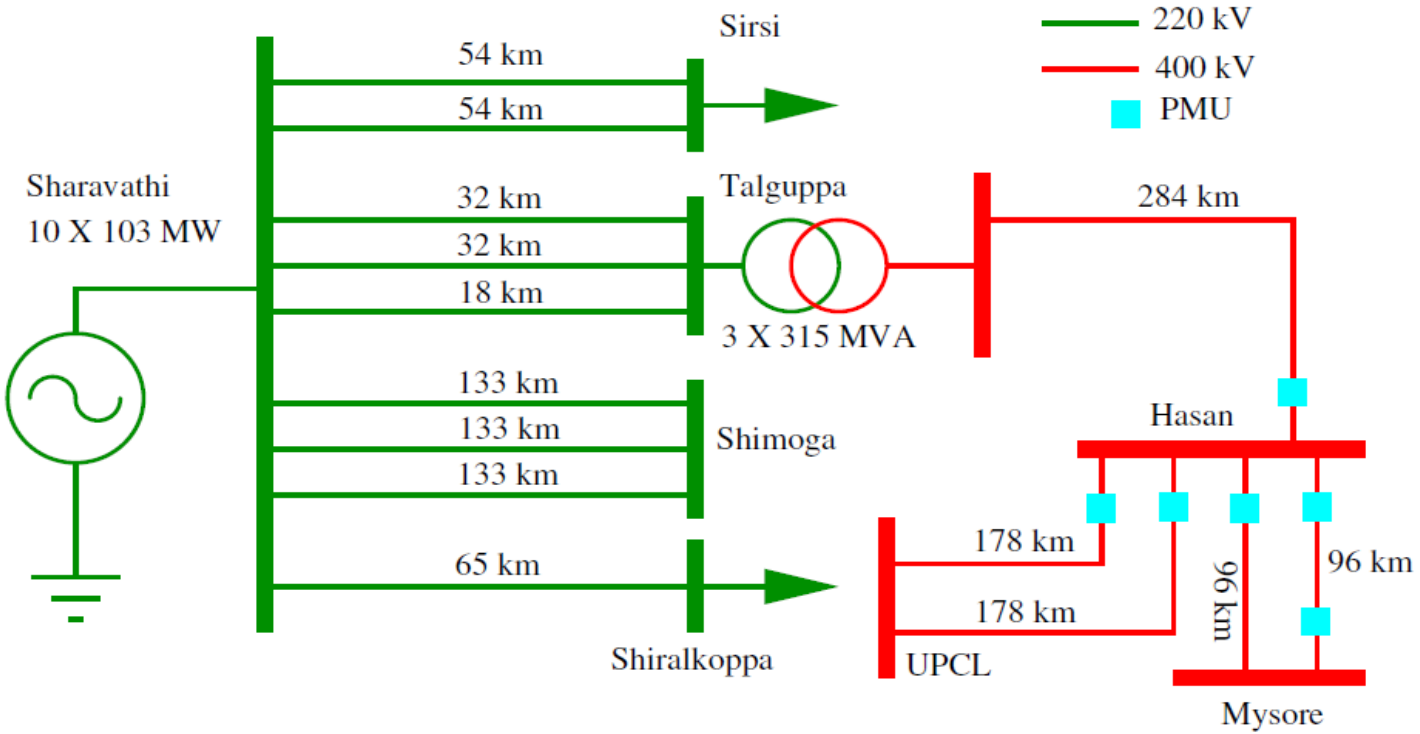

Case Study 1 (SCADA Snapshot)

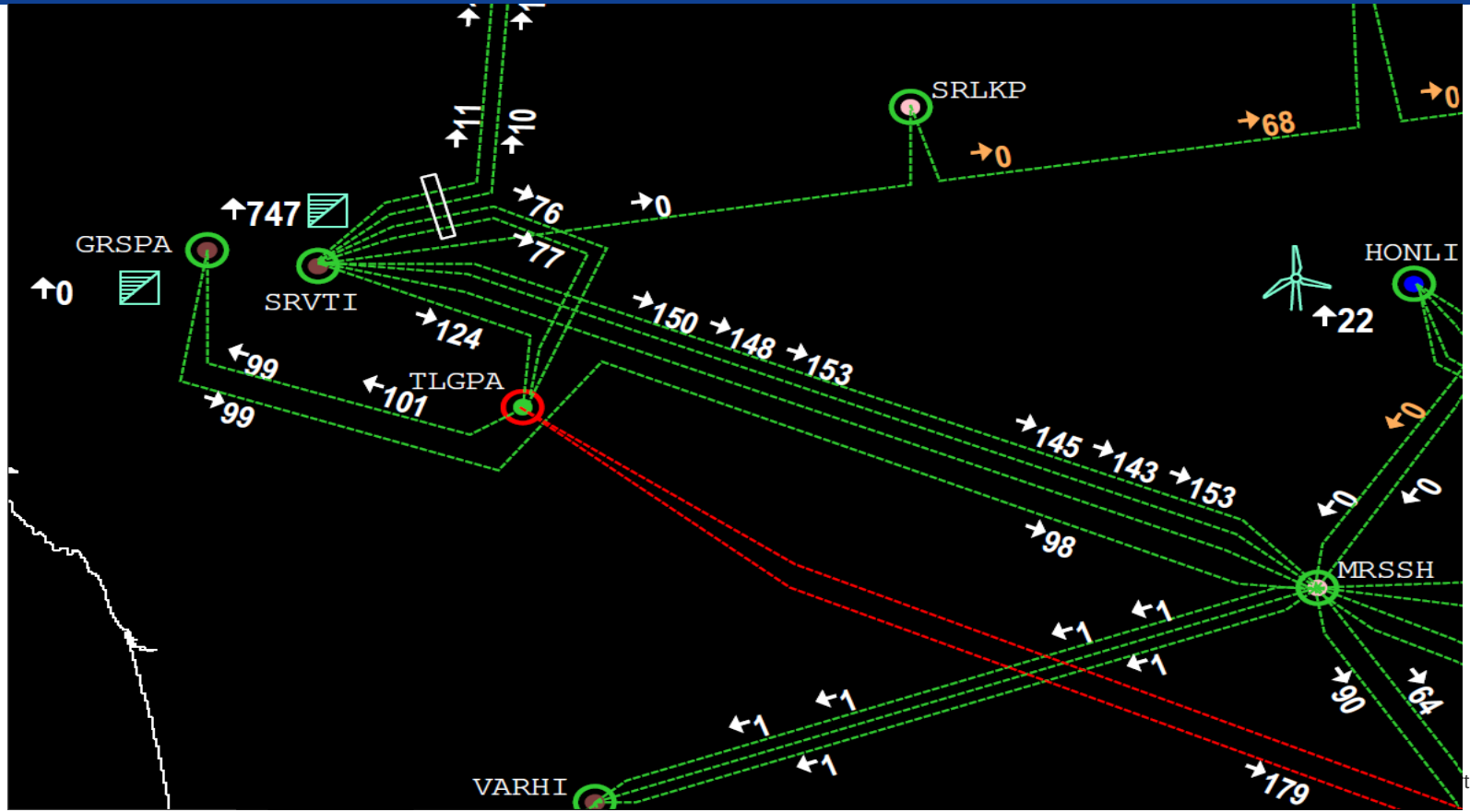

220 kV Sharavathi – Shimoga T/C trips

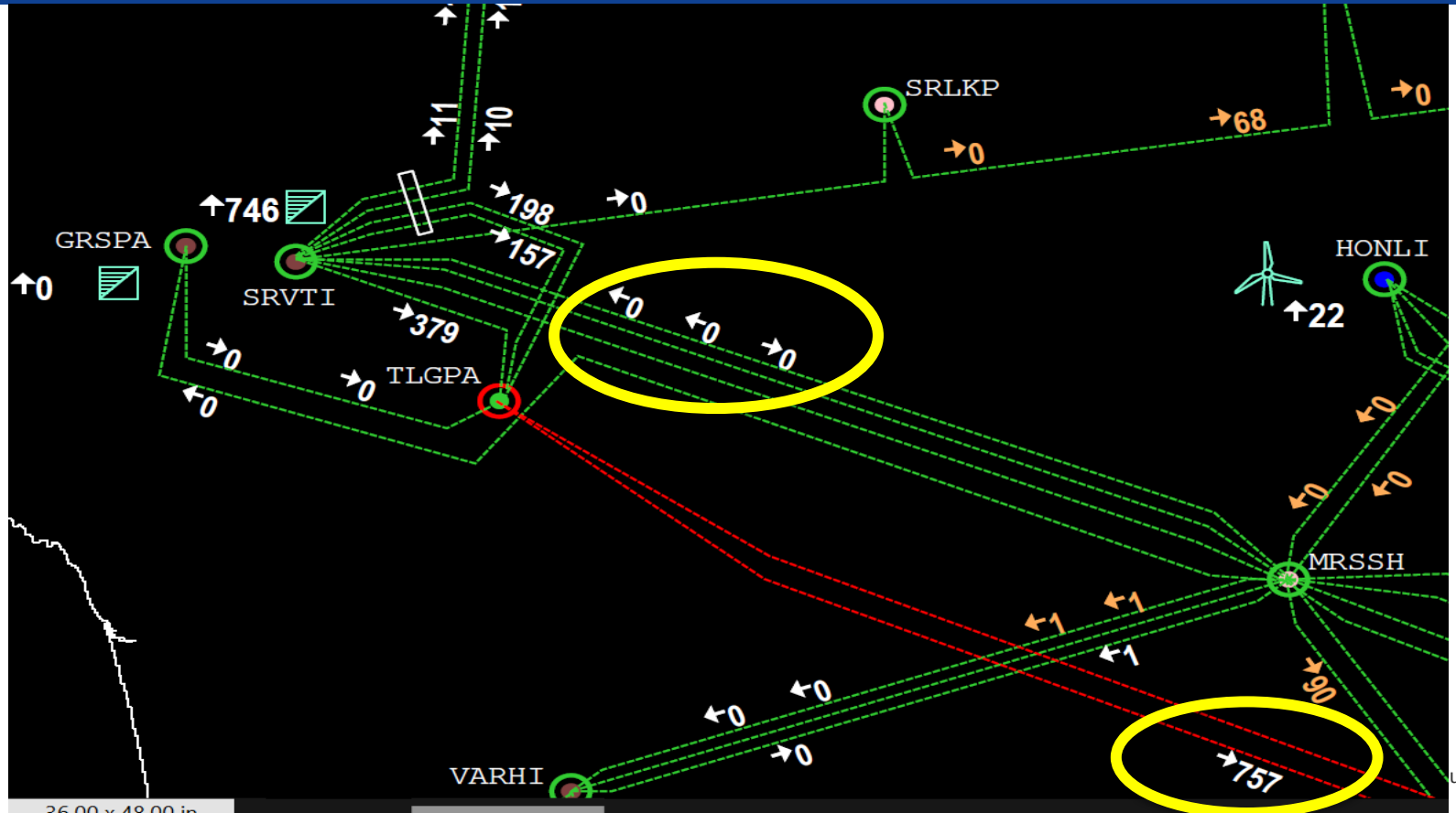

Plant operator reduces generation by 500 MW

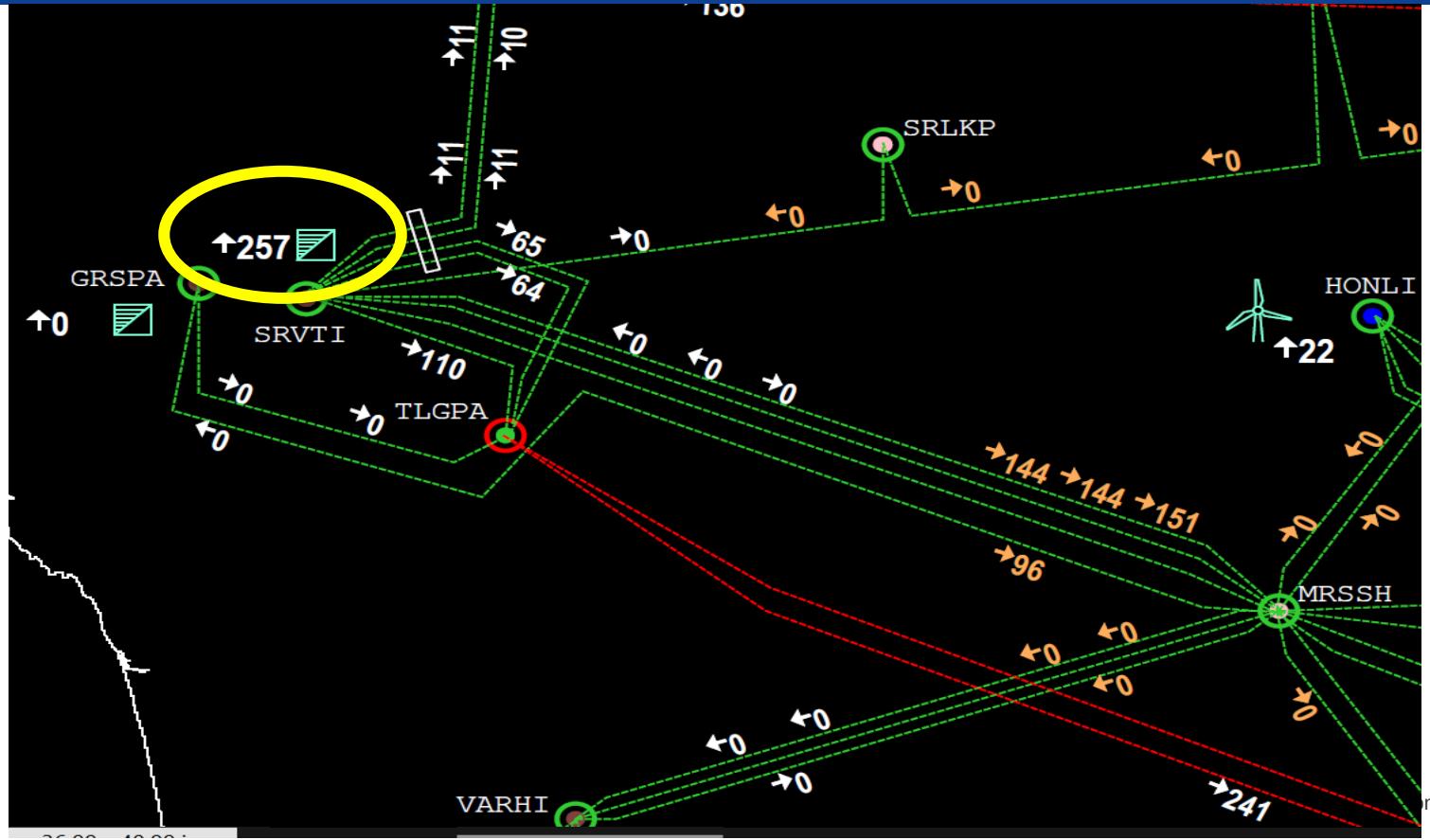

DEF Analysis (FFT, Study Line & Study window)

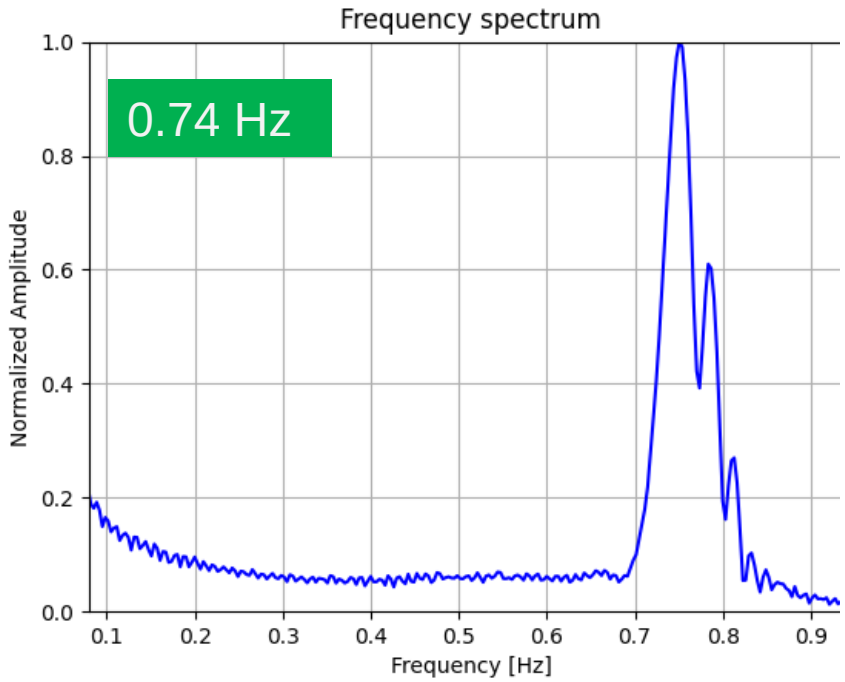

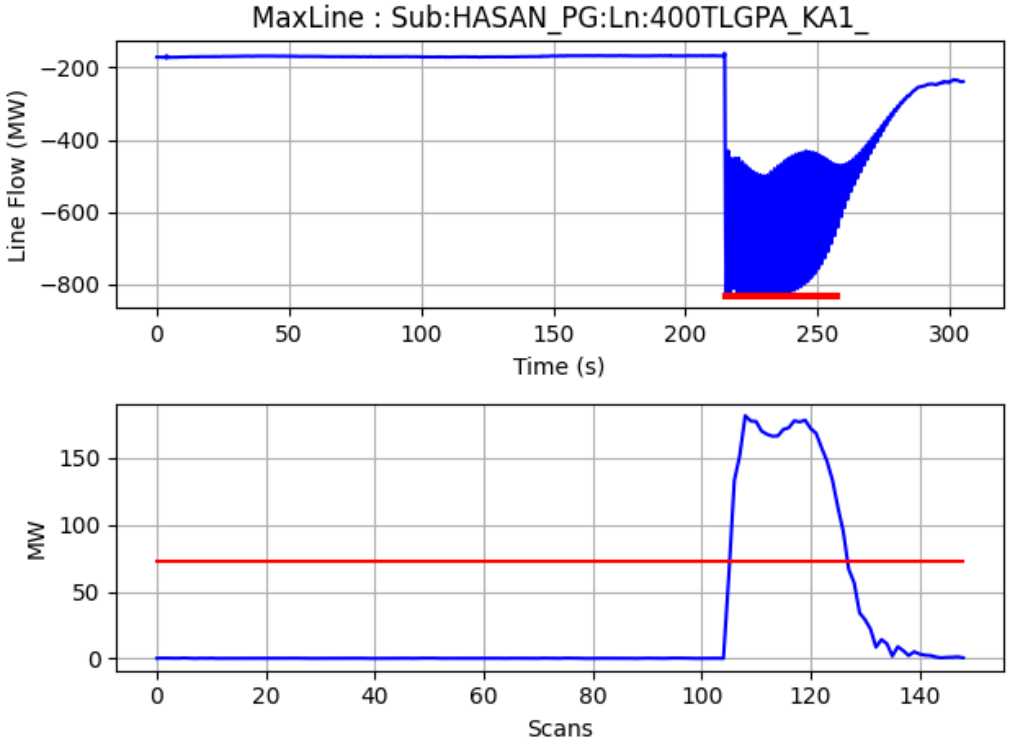

DEF Analysis (Source identification)

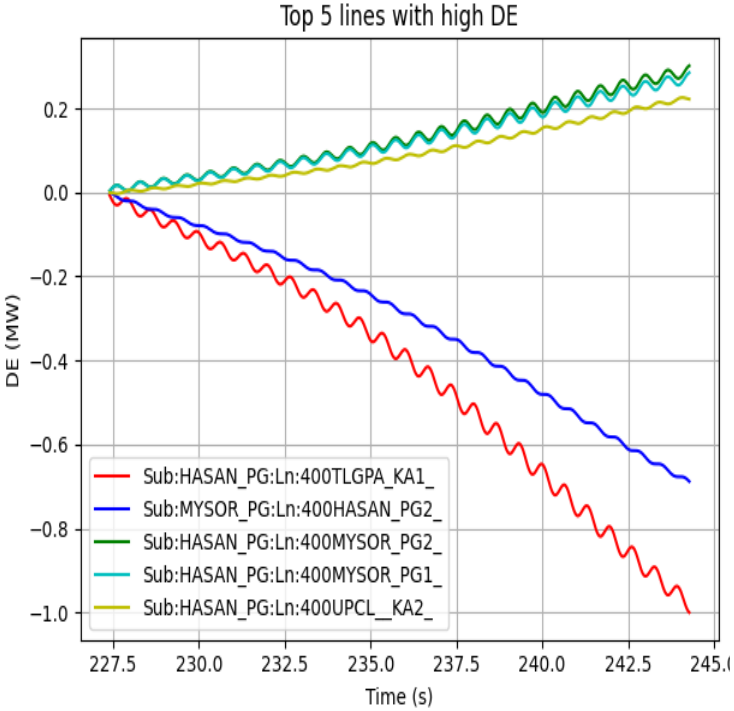

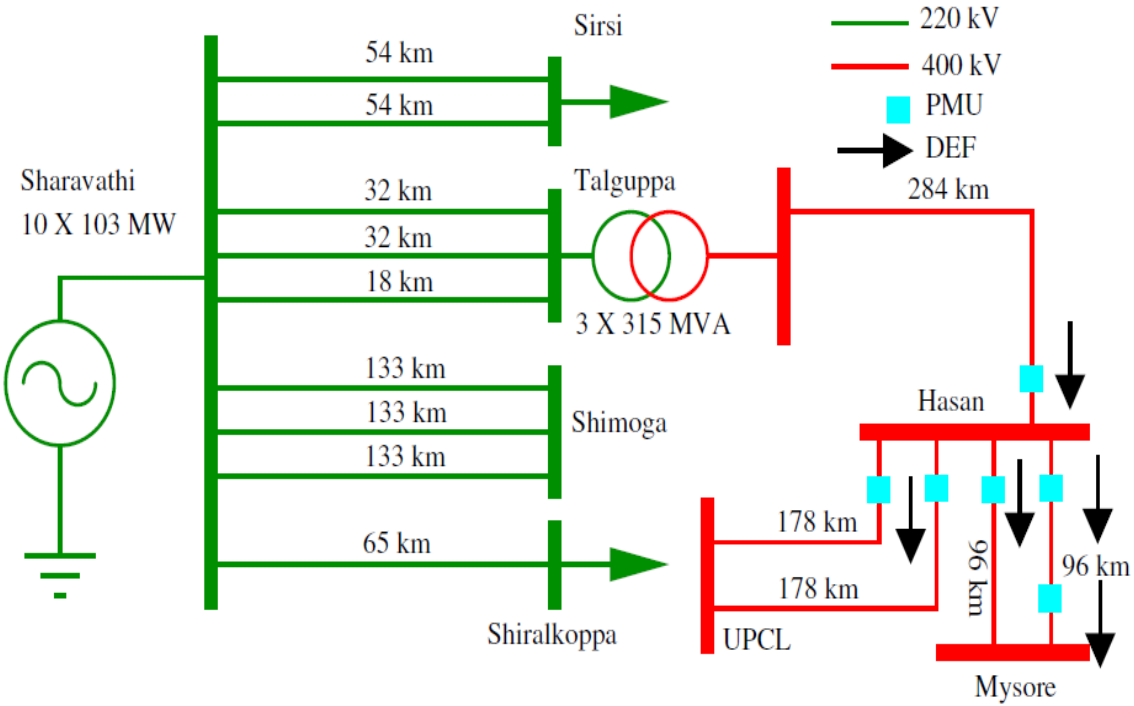

Source correctly identified Hasan PMU

Case Study 2

Sept 28, 2021 Idamalayar hydro unit tripped triggering small amplitude oscillations

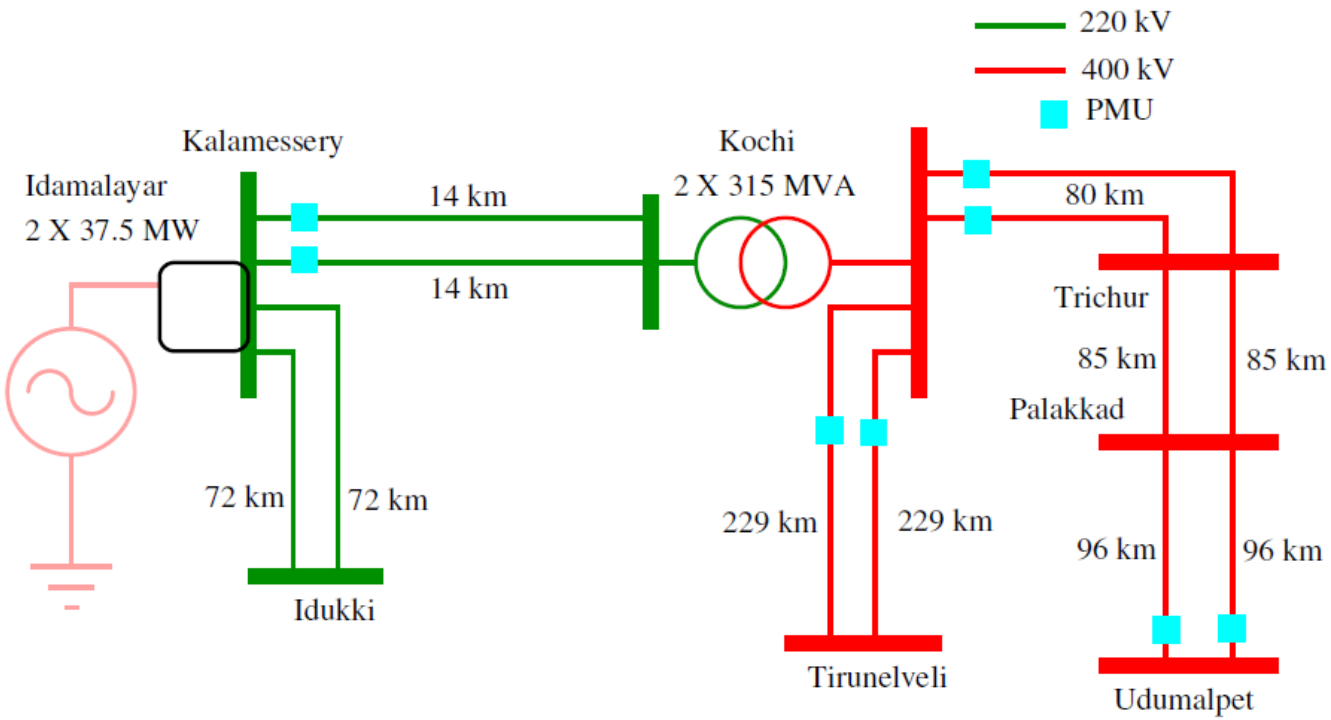

DEF Analysis (FFT, Study Line & Study window)

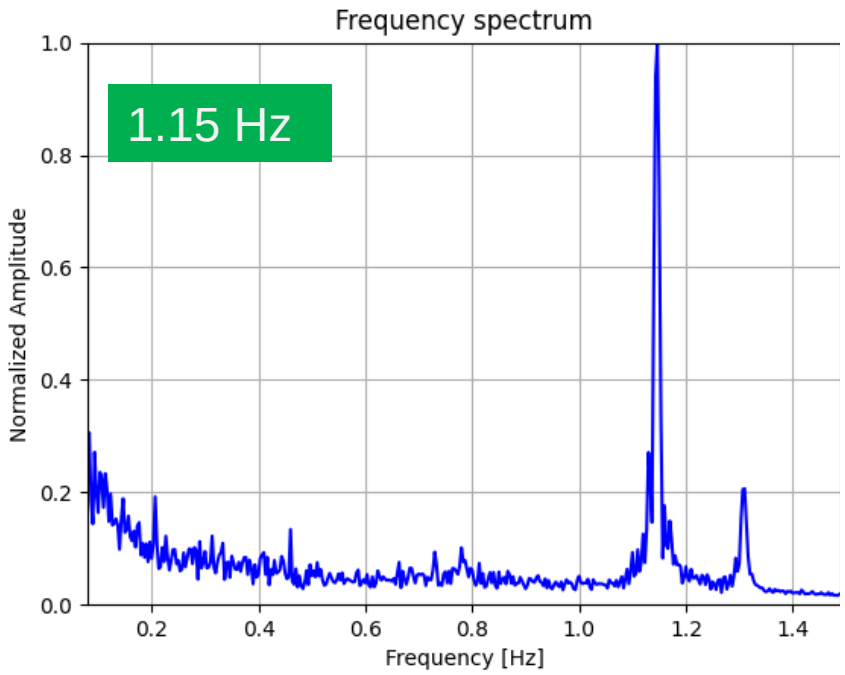

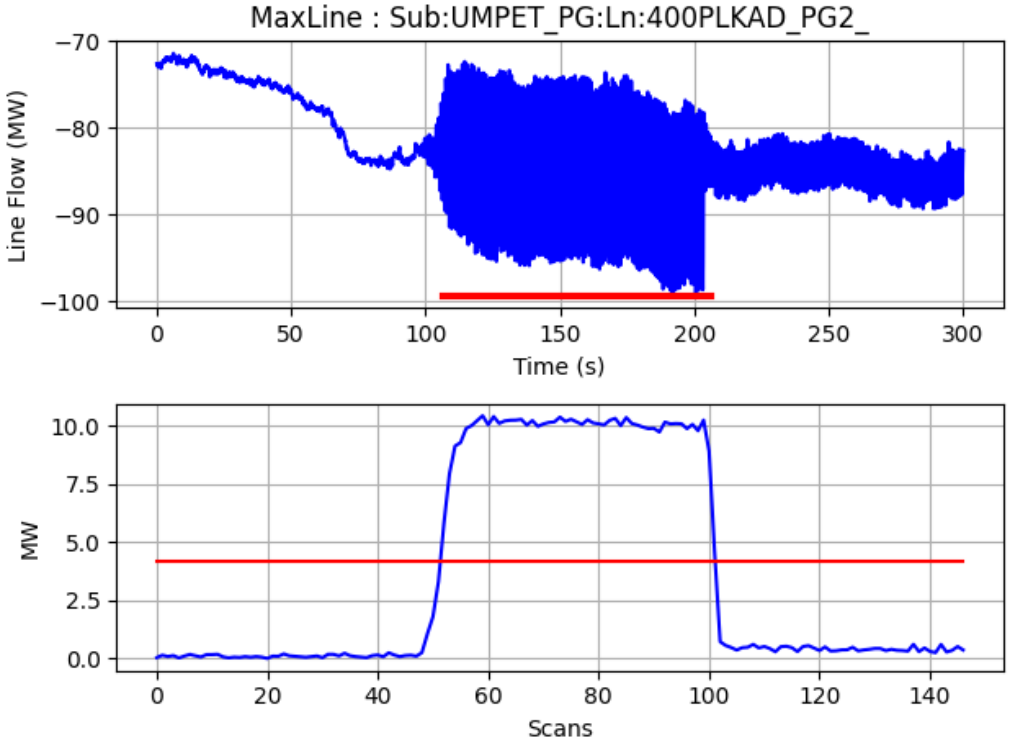

DEF Analysis (Source identification)

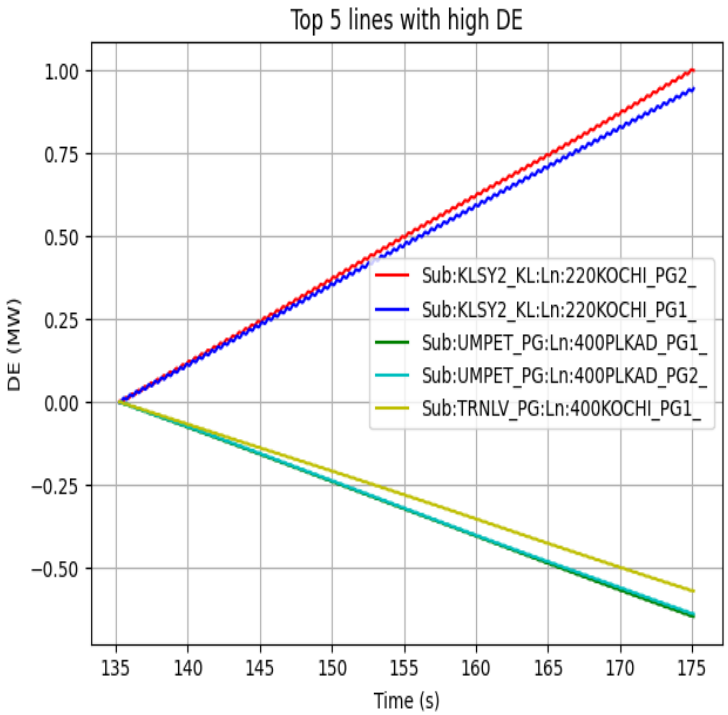

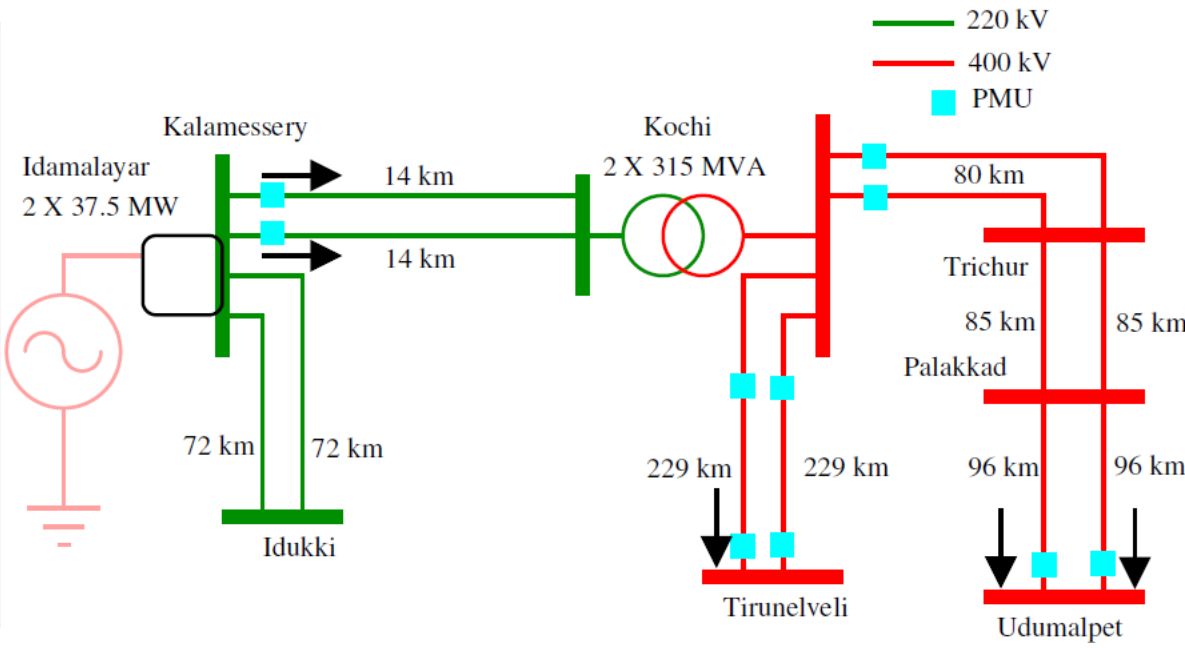

Source correctly identified Kalamassery PMU

Case Study 3

May 20, 2022 small amplitude oscillations observed on the Inter Regional lines

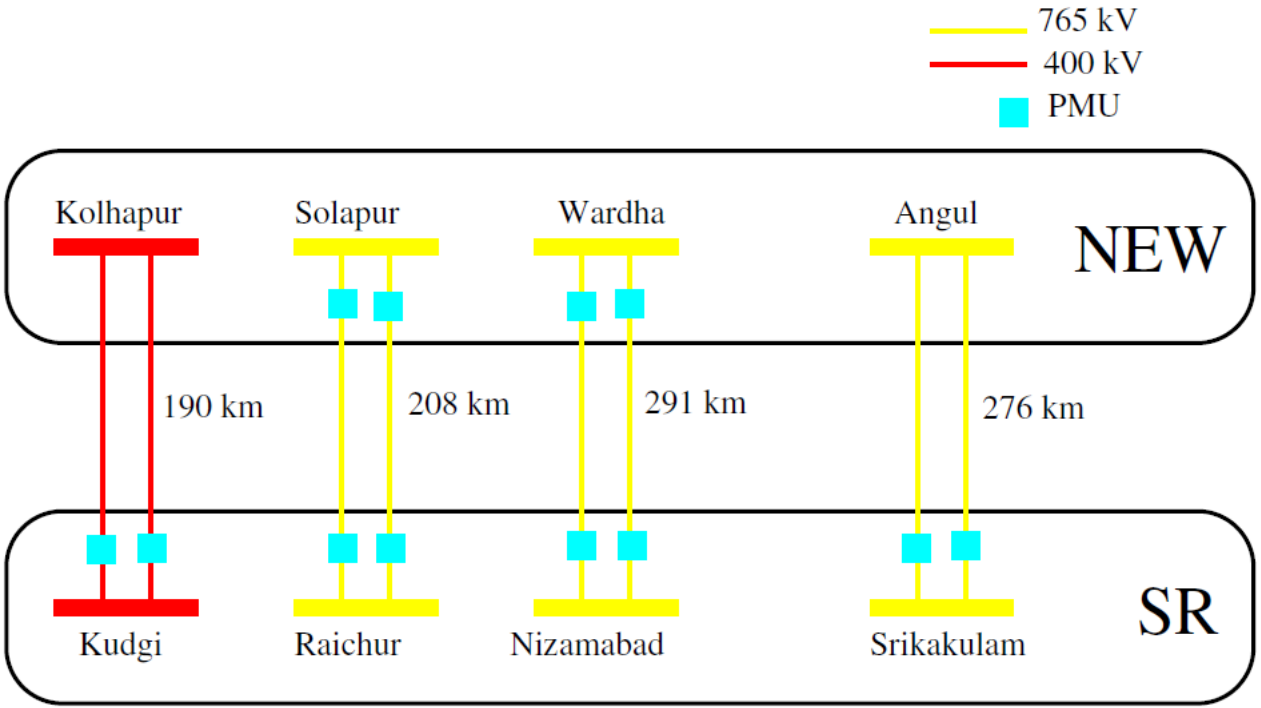

DEF Analysis (FFT, Study Line & Study window)

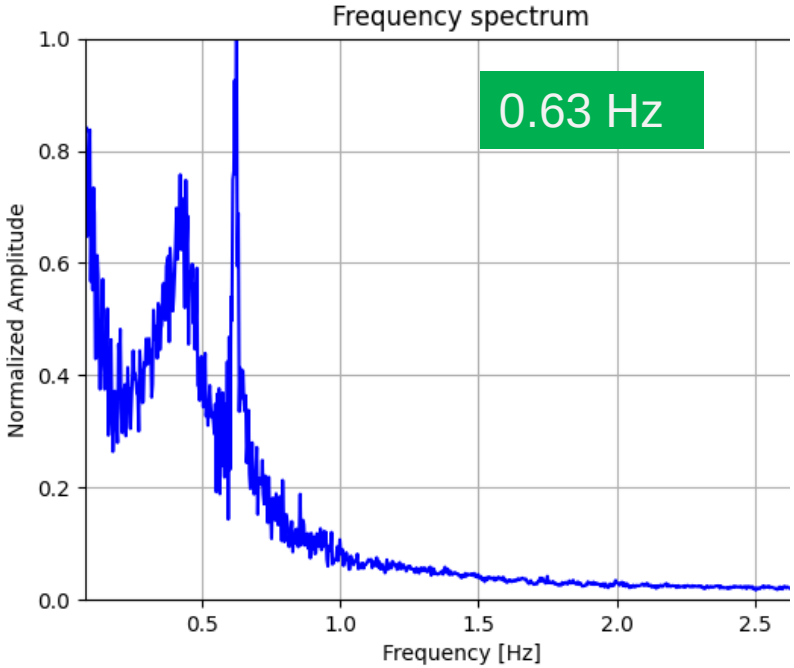

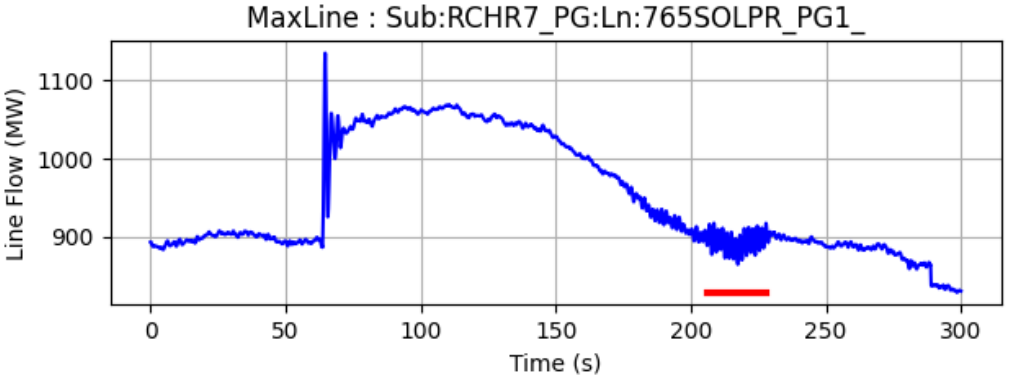

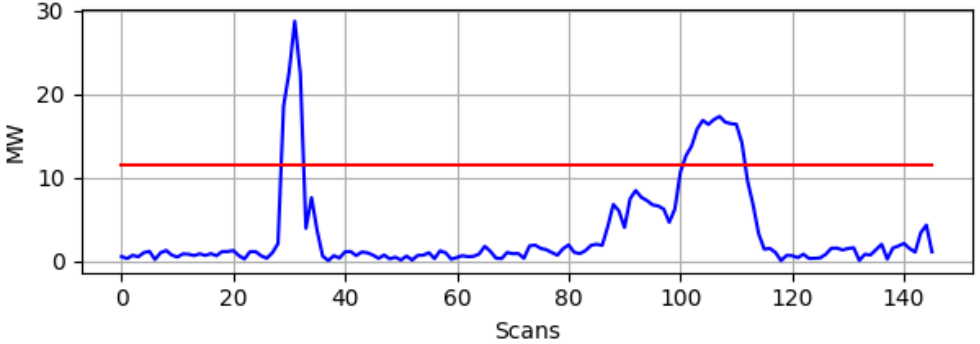

Longest time window selected

DEF Analysis (Source identification)

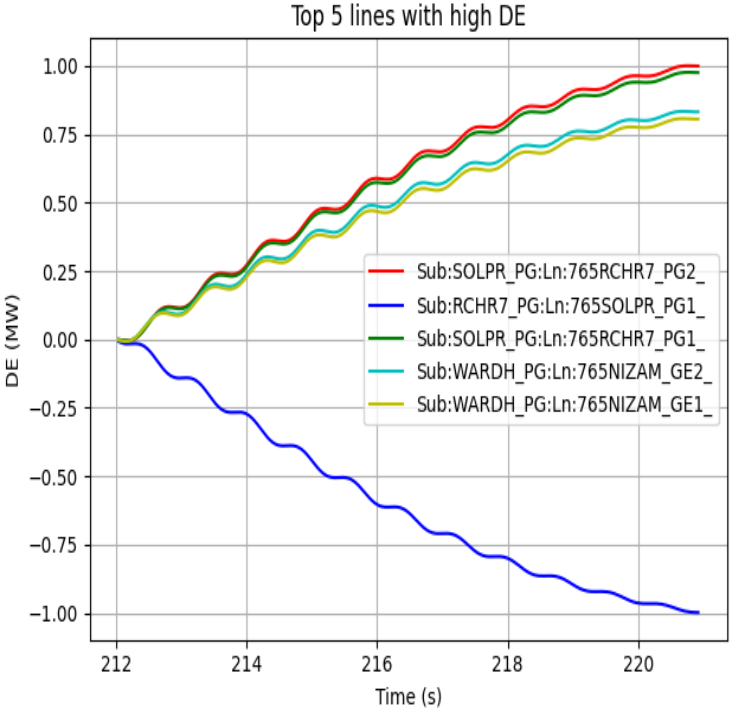

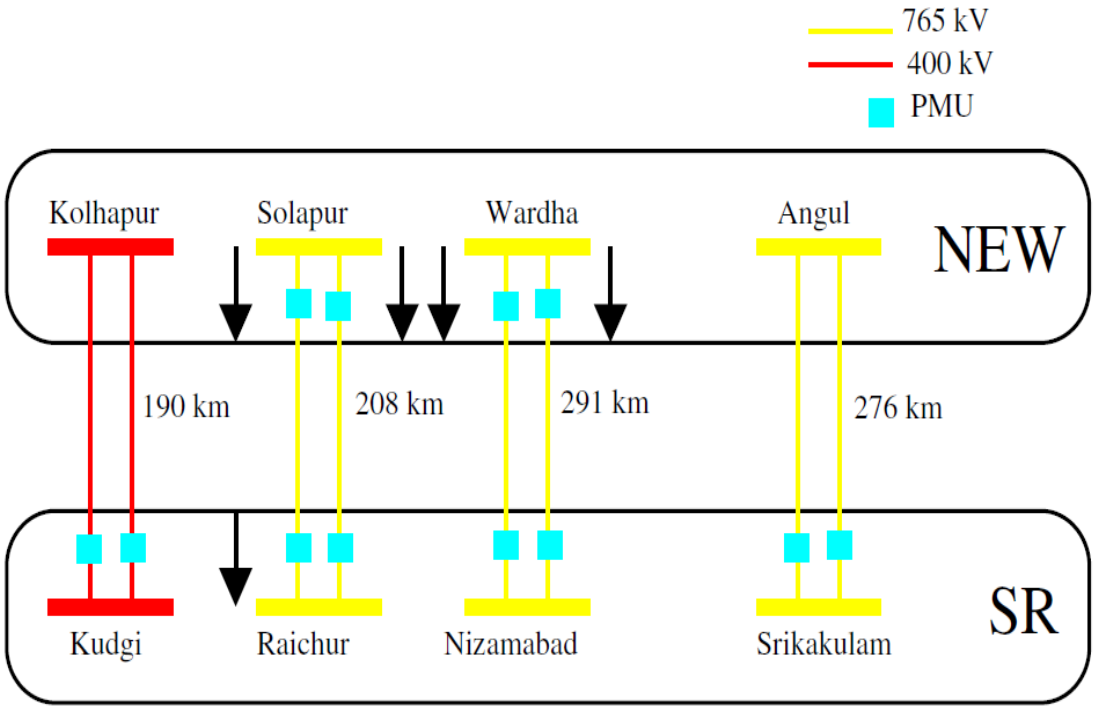

Source correctly identified Solapur PMU

Implementation of OSLp

Leverage of Open Source Technologies

OSLp Engine

Used **Modin Dataframes to scale the program** for this huge volume of data

Store Results

Postgres Database to store the results

Visualize Results

Grafana & Apache e-charts

HTML Canvas for DEF Visualization on Grid Geo-Map

Oscillation Source Detection

Trigger from the **Event Detection** Engine(In House **using Z score**)

Get for **All 647 MW signal data** for 5 minute duration at 25 samples per second

Data Cleaning and Process for selection of Oscillation **time and spike analysis**

Get **MW, MVAR and Positive sequence Voltage Magnitude** of all Lines only for **identified Oscillation Time**

Clean the data and **calculate DEF**

Matrix Pencil Analysis for the top 5 DEF Lines

Store the results to **Database (Postgres)** and **Visualize (Grafana)** in Dashboard

Dashboard

OSLp Real Time Dashboard

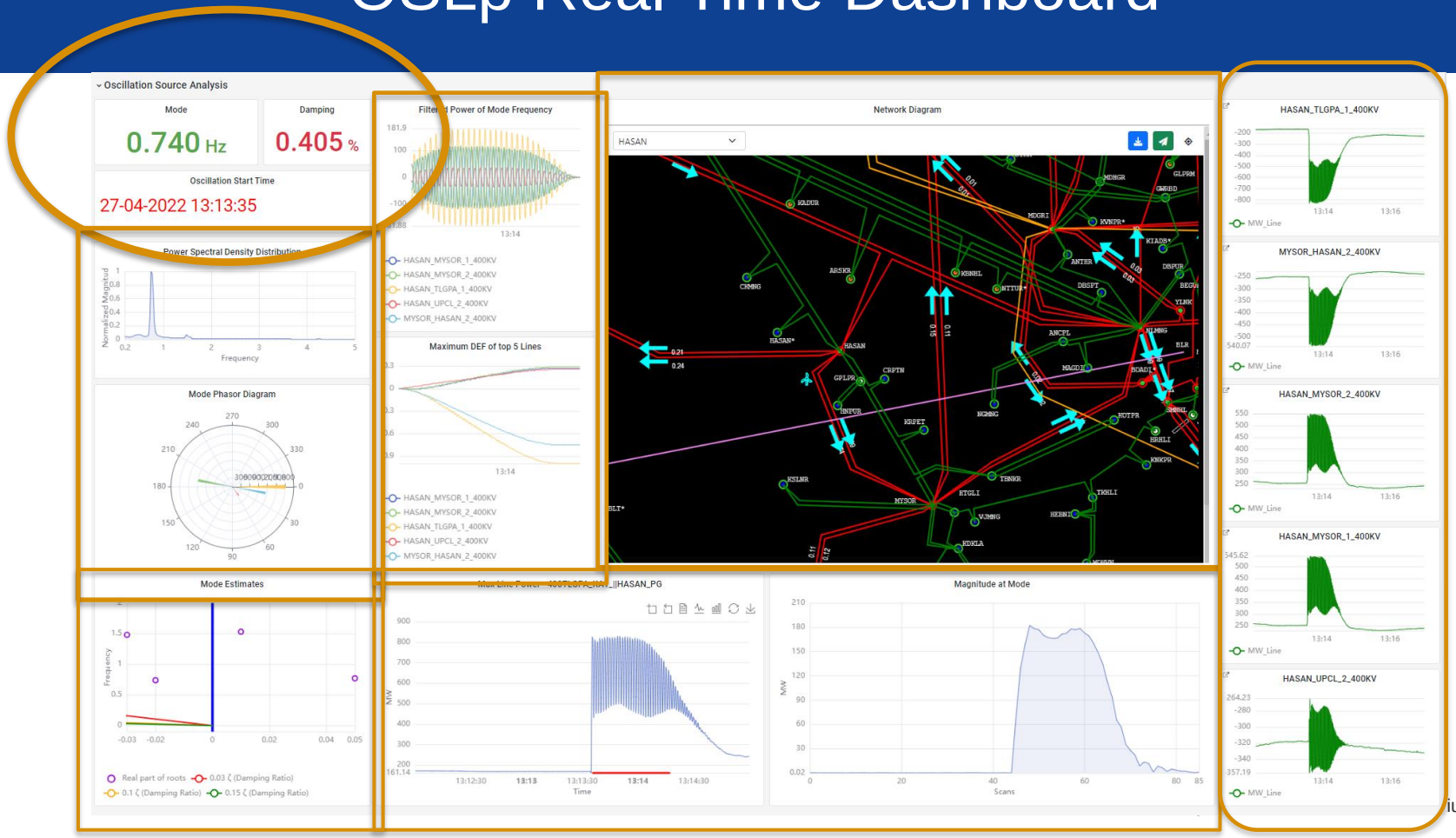

Demo of the Dashboard – Real Time Events

Q&A and Discussion

Please use the Q&A function in your Zoom toolbar to ask questions to our presenters.

Register for Our Upcoming Webinars

Nov. 17 2022 - Learning from Vietnam's Experience on High Fluctuations of Variable Renewable Energy in the Grid System

Register – https://bit.ly/3UphJki

Dec. 6, 2022 - Women in Power System Transformation and the Global Power System Transformation Consortium Present Free Teaching Materials for Global Public Use

Register – https://bit.ly/womenPSTcourse

Dec. 15 2022 – Planning for Peru's Power System – The Control Center of the Future

Register – https://bit.ly/peru-control-center

Learn more about how G-PST is helping unlock zero-emission, low-cost, secure and reliable power systems by scanning the QR code below.

Thank you!

globalpst.org

GLOBAL PST CONSORTIUM